E nglish

REX

ROLL GROOVER SERIES

Portable Groover M

RG-R0, R1, R2, E1, E2 OPERATION MANUAL

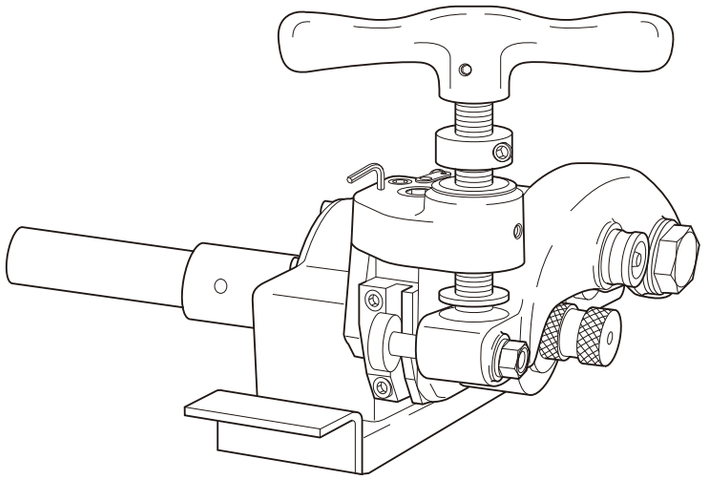

Be sure to read this
Operation Manual before
using the machine

- Note -

- Be sure to hand this operation manual to the user.
- To ensure safe and efficient use, read the manual thoroughly before using the machine.
- Be sure to keep this operation manual where the operator can refer to it whenever necessary.

Date of purchase: Year Month

Sales agent:

· Be sure to observe the [Safety Precautions] described below to prevent accidents such as fire, electric shock and injury.
· Read these [Safety Precautions] carefully before using the machine, and operate the machine according to the instructions.
· Do not use the machine in any way other than as described in this instruction manual.

CONTENTS

1. Safety Precautions P.1
2. Instructions for using the Portable Groover M P.3
3. Names of Parts, Standard specifications, Accessories P.4

4. Setting up
① Setting up P.5
② Attaching to the pipe threading machine P.7
③ Pipe setting P.7

5. Operating Instructions
① Groove depth adjustment P.10
② Grooving P.10
③ Checking the dimensions P.12

6. Before requesting repairs or servicing P.13
7. Daily inspection, maintenance P.14
8. Requesting repairs P.14

Definitions of ⚠WARNING and ⚠CAUTION

In this operation manual, warnings are divided into ⚠WARNING and ⚠CAUTION

⚠WARNING : indicates actions that could possibly result in death or severe injury to the user if the machine is used incorrectly.

⚠CAUTION : indicates actions that could possibly result in injury to the user, or physical damage, if the machine is used incorrectly.

- Even items marked ⚠CAUTION could have serious outcomes under certain conditions. Be sure to observe these warnings carefully as they greatly affect safety.

If this manual is lost or damaged, promptly order a replacement from your distributor or our sales department. Also you can download this manual from REX's website (www.rexind.co.jp).
Parts and specifications are subject to change without prior notice, due to improvements in quality, performance or safety standards. In such cases, the contents, photographs, illustrations, etc. in this manual may be different to the product you have purchased.

1. Safety Precautions

⚠ WARNING

1) Ensure you use the correct voltage.
- Be sure to use the voltage indicated on the name plate of the main unit or in the instruction manual. If the voltage is different from the voltage indicated overheating, smoke or fire may occur.

2) Check the switch is OFF, before inserting the plug into the power supply socket.
- If the plug is inserted into the power supply when the switch is ON, the machine may start operation abruptly, and is liable to cause accidents. Be sure to check the switch is OFF.

3) Be sure to avoid electric shock.
- Do not touch the plug with wet hands.
- Do not use the machine in rain or in places where water can easily get into the machine.
- Be sure to ground the machine to avoid electric shock.

4) Take notice of conditions at the work site.
- Do not use the machine in rain, humid or damp places, or places where water can easily get into the machine. Humidity will lower insulation of the motor and cause electric shock.
- Do not use close to flammable fluids or gases, such as gasoline and thinner. Fire or explosion might occur.

5) Use designated accessories and attachments.
- Do not use accessories and attachments other than those designated in the operation manual or ou catalogs. Accidents or injuries might result.

6) In the following cases, turn the main unit OFF and pull the plug out of the power supply socket.
- When the machine is not in use or parts are changed, repaired, cleaned or inspected.
- When accessories are changed.
- When hazards are expected (including electric power failure)
  When the plug is inserted, the main unit may start operation unexpectedly, causing accidents.

7) If any abnormality is noticed, stop operation immediately.
- When operation of the machine is not smooth or abnormalities such as unusual smells, vibration or noise are detected, immediately stop operation of the machine.
- Check symptoms against the items in [Troubleshooting Methods] in the instruction manual, observe corresponding instructions. If the machine is being used continuously, overheating, smoke or fire might occur, causing accidents or injury.
- If overheating or smoke from the main unit occurs, do not attempt an overhaul but ask for an inspection and repair.

8) Keep the work site clean.
- Ensure you keep the work table and the work site in good order, and well lit. A cluttered site and work table are liable to cause accidents.

9) Do not let authorised personnel come near the machine.
- Do not let any people other than authorised personnel touch the main unit or the power supply cord or operate the machine.
- Do not let people other than authorised personnel enter the work site, especially children. Injuries might occur.

10) Do not use the machine with force.
- Use the machine only for its designated purpose. Operate according to the capacity of the main unit, to assure safe and effective operation. Forced operation may not only cause damage to the product but also accidents.
- Do not use the machine in the any way that could cause the motor to lock, or cause smoke or fire.

11) Wear neat clothing.
- Do not wear neck ties, clothes with open sleeves, loose clothing, accessories such as necklace, etc., which could get caught in the rotating parts.
- When working outdoors, it is recommended to wear rubber gloves and shoes with stoppers. Slippery gloves and shoes are liable to cause injuries.
- Cover long hair with caps or hair nets, to prevent them getting caught in rotating part.
- Wear safety caps, safety shoes, etc. according to the working environment.

⚠ WARNING

12) Do not work in unnatural posture.
- Keep a firm footing and balance to avoid falling over and injuring yourself.

13) Remove tools such as wrenches.
- Before turning ON the switch, check that tools used for inspection and adjustment have been removed. If you use the machine when tools are left inside it, accidents and injuries may occur.

14) Operate the unit with great care.
- Always work with great attention to handling methods, working methods and surrounding conditions. Carelessness may result in accidents and injuries.
- Do not operate the machine when concentration is lowered such as when tired, after drinking alcohol, when sick, affected by medicines, etc.

15) Do not handle the power supply cord carelessly.
- Do not carry the product by the cord, or pull the plug out of the socket with the cord.
- Do not place the cord near heated objects, fats & oils, cutters and objects with sharp edges.
- Take care not to tread on the cord, pull the cord or apply unnecessary force resulting in damage to the cord. Electric shock or short-circuit may occur, causing fire.

16) Perform careful maintenance daily.
- When changing accessories and parts, follow the instruction manual.
- Periodically inspect the power supply cord and plug. If damaged, ask to your sales agent or our sales branch for repairs.
- If an extension cord is used, inspect the cord periodically, and if damaged, replace it. If extension cords are used outdoors, use extension cords designed for outdoor use to prevent electric shock, short-circuit or fire.
- Keep gripping parts dry and clean and free of oil and grease. Slipping may cause injury.

17) Check for damaged parts.
- Before using the machine, carefully check for damage to the protective cover and other parts, and check both normal operation and specified functions.
- Check for any abnormalities such as in adjustment of movable parts, tightening, damage to parts, and all parts affecting operation.
- Do not use machines if the stop and start switches do not work.
- In replacing or repairing a broken protective cover and other parts, follow the instruction manual. If no instructions are specified in the instruction manual, ask your sales agent or our sales branch for repairs.

18) Store carefully when the machine is not in use.
- Store in a dry place away from children and locked with a key.

19) For overhaul and repair of the machine, ask an appointed REX agent.
- Our products comply with corresponding safety standards. Do not remodel.
- Be sure to ask your sales agent or our sales branch for any repairs. If repairs are carried out by unskilled or unqualified personnel, the performance of the unit will be adversely affected and may result in accident or injury.

2. Insturuction for using the Portable Groover M

⚠ WARNING

1) Use rollers that match the pipe size. (Refer to Fig.1, 5)
   The rollers supplied as standard can only be used for 2"~ 6" steel pipe (Sch 10) and 2"~ 3" steel pipe (Sch 40). They cannot be used for pipes of other sizes.
   Since the appropriate sizes are marked on the rollers, replace the rollers according to the pipe size.
2) Never touch rotating parts or workpieces.
   To prevent injury to hands and fingers, do not touch rotating rollers and pipes with your hands.
3) Attach the mount base that matches the pipe threading machine to be used.
   If a different type of mount base is attached, it with not be possible to set it on the pipe threading machine correctly.
4) The pipe must be set correctly.
   To set the pipe, allow it to engage the pipe threading machine in the direction it is rotating and shift it by 0.5 degree in the correct direction.
   If the pipe is shifted in the reverse direction, it will slip, making grooving impossible.
5) Operate the handle correctly.
   When grooving, turn the handle 1/4 to 1/2 of the speed that the pipe rotates.
   If the handle is turned too quickly, the machine may be damaged.
6) Be sure to install the pipe threading machine and pipe stand on a stable flat place.
   Avoid using the pipe threading machine and pipe stand in an unstable position or the machine and pipe may fall over.
7) After completing the groove, be sure to check on the size of each part with calipers, etc.
   (Refer to P. Roll groove processing size table)

3. Names of parts, Standard specifications, Accessories

■ Names of part

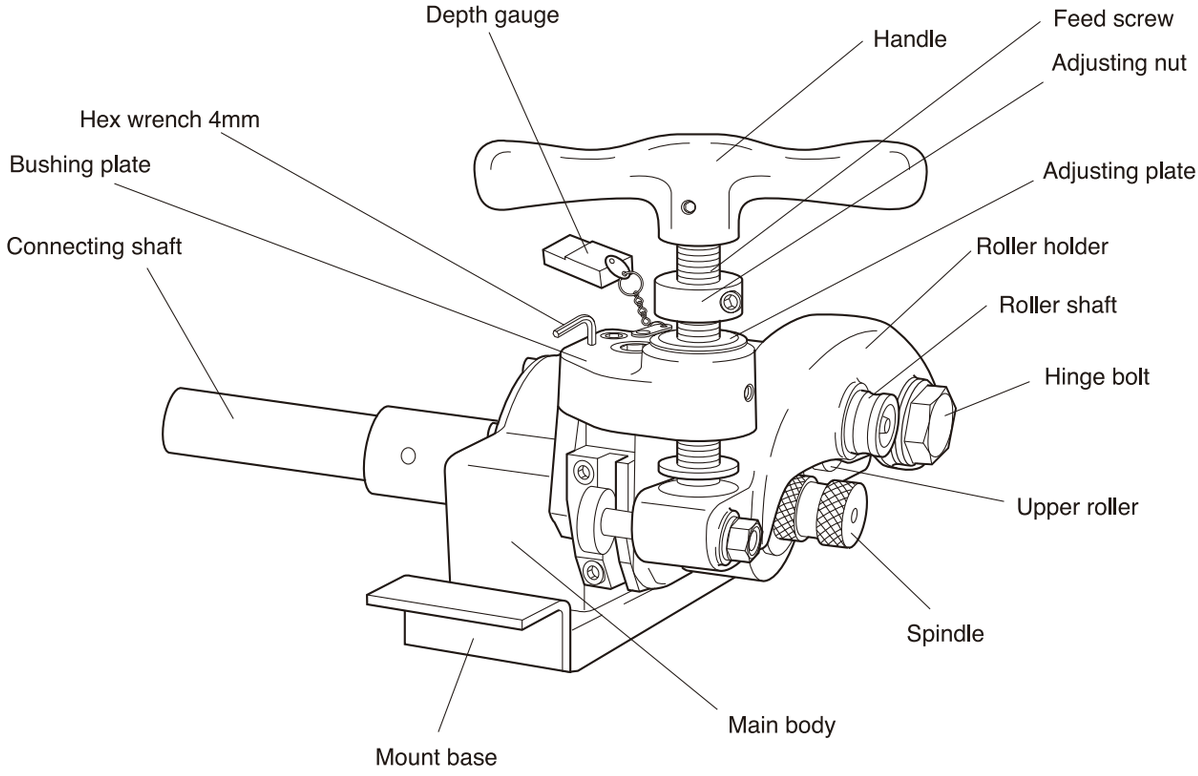

Fig.1

■ Specifications

Model Name	RG-R0	RG-R1	RG-R2	RG-E1	RG-E2
For use with		50A	80A	#300	300 Compact
Working Capacity	1" − 6" Schedule 10 1" − 3" Schedule 40 Standard Model For 2" − 6" Schedule 10 2" − 3" Schedule 40 roller set.				
Net Weight(kg)	14.0				
Standard accessories	Mount base (Except RG-R0) : 1 Connecting shaft : 1 Socket head cap screw (M8 x 25) : 4 Spring washer (8mm) : 4 Hex wrench (3, 4, 5, 6mm) : 1 Grease : 1 Tool box : 1				
Optional Accessories	1" roller set (Schedule 10 & 40) $1^{1}/_{4}$" − $1^{1}/_{2}$" roller set (Schedule 10 & 40) Copper roller set ($2^{1}/_{2}$" − 6") Mount Base R1 ····· 50A machine R2 ····· 80A machine R3 ····· N100A E1 ····· #300 E2 ····· 300 Compact				

4. Setting Up

1. Setting Up

1) To Attach the Mount Base:
   Fix the mount base to the main body securely with the bolts supplied (M8 x 25) and the four spring washers (8 mm).
   To attach the mount base, set it in the same direction as the direction of the pipe threading machine.(Refer to Figs. 2 and 3)

⚠ CAUTION

- Always set the mount base that matches the pipe threading machine used. The mount base cannot be attached to the pipe threading machine correctly if a mount base for a different type is used.
  Which pipe threading machine it can be attached to is indicated on the rear of the mount base.
- If the mount base is attached in the opposite direction to the rotating direction used, an unnecessary load will be applied to the pipe threading machine chuck, thereby resulting in damage.
  Be sure to attached the mount base so that it matches the rotation direction used.

Attaching the mount base for forward pipe threading rotation

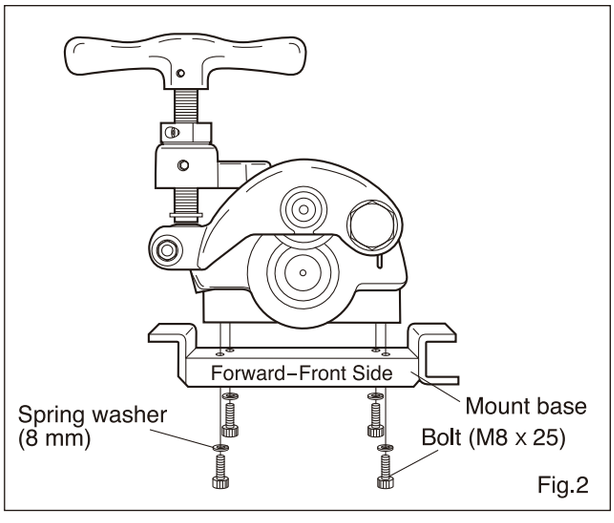

Fig.2

Attaching the mount base for reverse pipe threading rotation

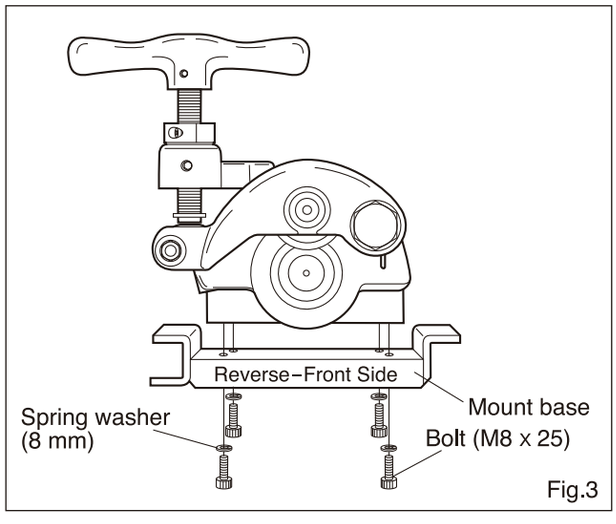

Fig.3

2) To Attach the Connecting Shaft:
- Insert the connecting shaft fully into the spindle then fix the shaft on the spindle by tightening the two screws against the flat surface of the spindle. (See Fig. 4)

⚠ CAUTION

- Be sure to tighten the screws against the flat part of the spindle as illustrated. If the cylindrical part is tightened, the screws will come loose during grooving, and the spindle will not turn properly.

3) To Replace the Roller Set:
- The standard roller specifications are for steel pipe 2"to 6".
  Where other sizes of steel pipes are to be machined, replace the roller set (upper roller and spindle). The appropriate sizes are stamped on the roller. (Fig. 5)

⚠ CAUTION

- Be sure to replace the roller with the upper roller and spindle as a set. If the wrong combination is used, correct grooving will not be possible.

[Replacement of Roller Set]

- Upper roller
  1) Turn the handle antilockwise to elevate the roller holder to the full. (Fig. 6)
  2) Loosen the roller shaft locking screw and pull out the roller shaft: the upper roller and thrust washer will be detached.
  3) To attach the upper roller, set it in the direction on which the roller size marking is located on the rear, insert the thrust washer on the opposite side, then insert the roller shaft and finally lock the shaft spot facing hole firmly with the locking screw. (Fig. 7)
- Spindle:
  1) Loosen the 4 bolts in the bearing plate to remove the bearing plate. (Fig. 8)
  2) The spindle can be detached from the main body by pulling it.
  3) To attach the bearing, insert it, attach the bearing plate, then tighten it firmly with the 4 bolts.

⚠ CAUTION

- Clean the upper roller, thrust washer, spindle and roller shaft thoroughly with a cloth before setting.
  Also, replenish the bearing and both faces of the upper roller with grease.

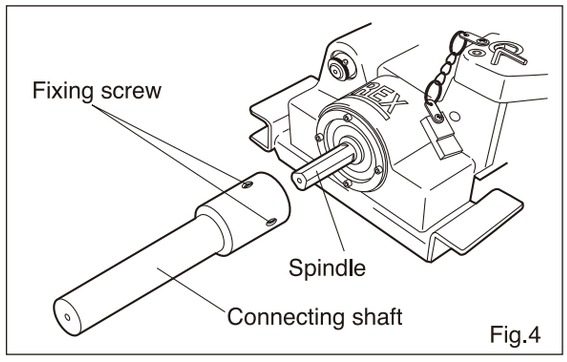

Fig.4

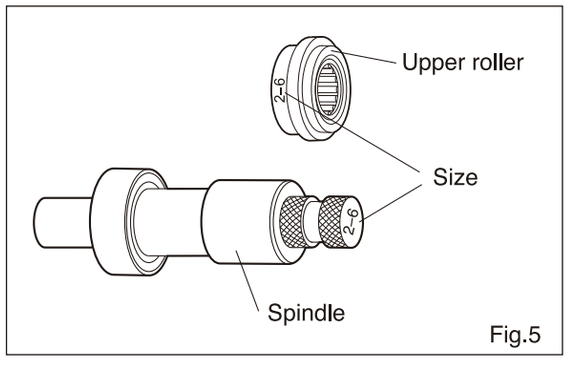

Fig.5

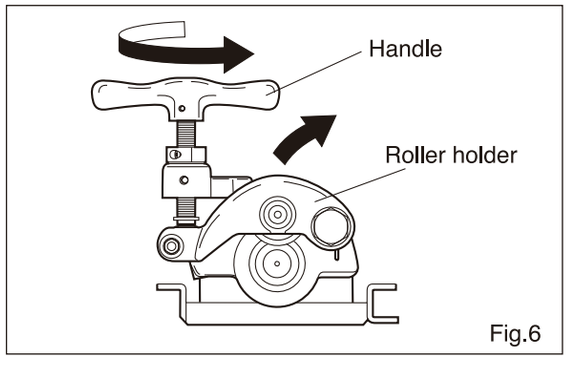

Fig.6

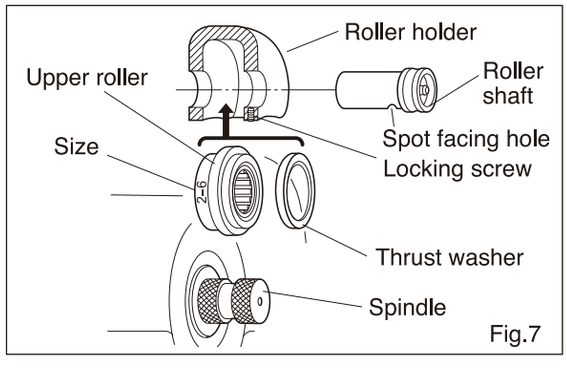

Fig.7

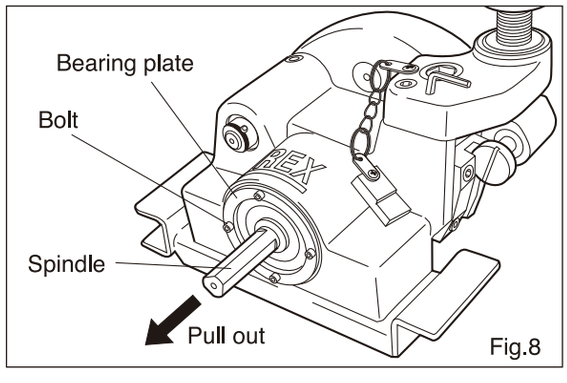

Fig.8

2. Attaching to the Pipe Threading Machine

⚠ WARNING

- Be sure to install the pipe threading machine and pipe stand on a flat stable surface.
  Be sure to avoid using the machine and pipe stand in an unstable position since they may fall over.

1) Fully open the front chuck on the pipe threading machine.
2) Pull the carriage completely towards the front chuck. (See Fig. 9)
3) Place the mount base on the carriage support bar, and tightly grasp the connecting shaft with the front chuck. (See Fig. 10)

⚠ CAUTION

- Use the mount base that matches the pipe threading machine.
- Attach the mount base only in the direction in which the pipe threading machine rotates.
- To attach it correctly, refer to "To Attach Mount Base" on Page 5.

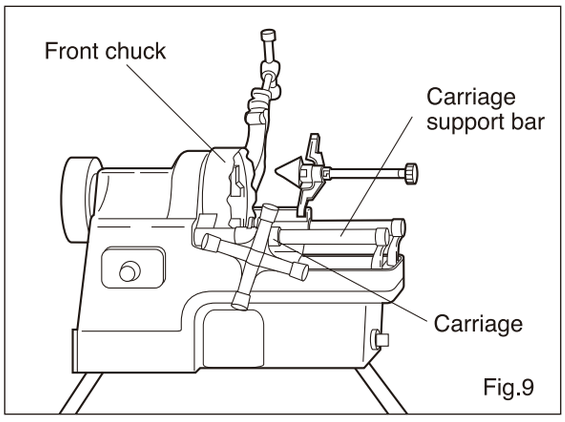

Fig.9

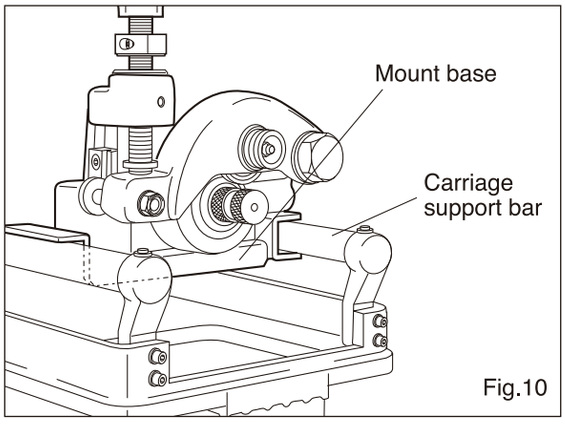

Fig.10

3. Pipe Setting

⚠ CAUTION

- The pipe to be machined should be cut at right angles without any step difference, and the pipe used should be free of deformation. If the cut surface is tilted and has a step difference or the pipe is deforned, it cannot be machined to the correct groove size. (See Fig. 11)

- Table 1 shows the minimum length of a machinable pipe and the maximum length of a pipe that can be machined without using the pipe stand.

⚠ WARNING

- Where a long pipe is machined according to Table 1, be sure to use the pipe stand.
  The machine and pipe may fall over, thereby causing an accident.

The following pipe cannot be machined to the correct size:

- The cut surface is slanted.
- There is a step difference on the cut surface.
- The pipe is deformed.

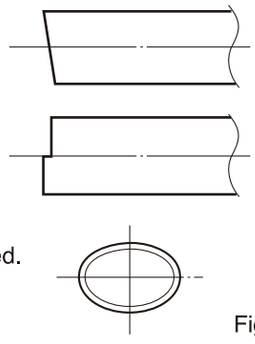
Fig.11

Table 1 Machinable Pipe Length

Pipe Size	Machinable Pipe Length (MIN)	Maximum Machinable Length of Pipe without Using Pipe Stand
1" – 2"	70mm	800mm
2 1/2" – 2"	70mm	700mm
5" – 6"	70mm	600mm

1) Inserting a pipe

・Insert the pipe to be machined until it comes into contact with the spindle flange (collar) surface. (See Fig. 12)
For a pipe exceeding the length indicated in Table 1 above, support one side with the pipe stand.
Set up the pipe stand in a position corresponding to 3/4 of the entire pipe length. (See Fig. 13)

2) Pipe height adjustment

・Since the pipe threading machine is approx. 2 degrees off the horizontlal position, adjust the pipe stand height so that the pipe is 2 degrees lower. (See Fig. 14)

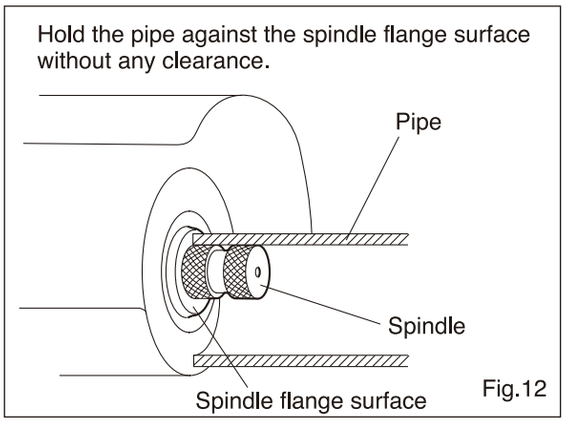

Fig.12

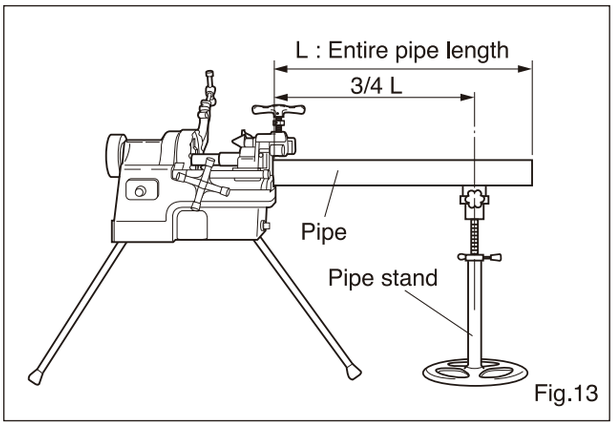

Fig.13

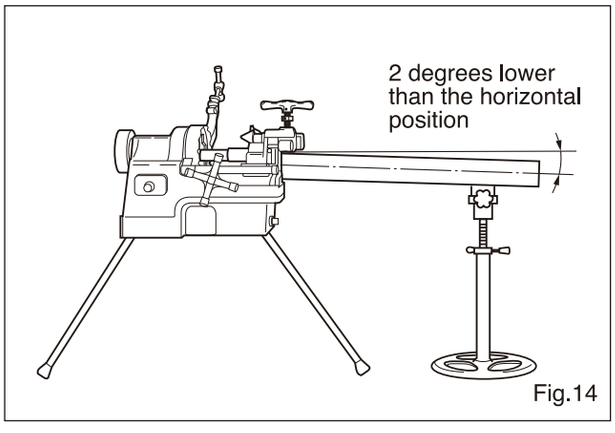

Fig.14

3) Pipe shifting adjustment

・Set the pipe while shifting it by 0.5 degrees to the spindle.
When the mount base is used in either the pipe threading rotation direction or the reverse rotation direction, the direction of the shift is reversed as shown in the diagrams opposite.
Be sure to shift the pipe according to the pipe threading machine rotating direction.
(Figs. 15 and 16)

⚠ WARNING

・If the pipe is set straight on the spindle or set in the opposite direction, it will come off during grooving and fall down, which could be dangerous.
Do not fail to check the rotation direction when setting the pipe.

When using in the pipe threading rotation direction:

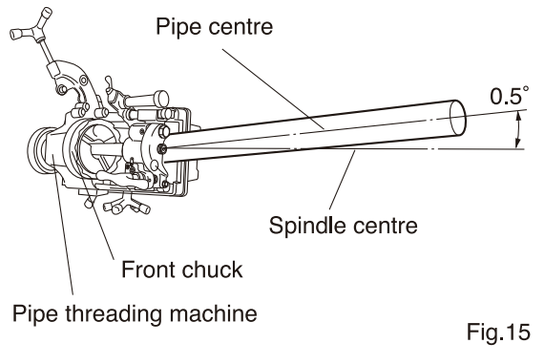

Fig.15

When using in the reverse direction:

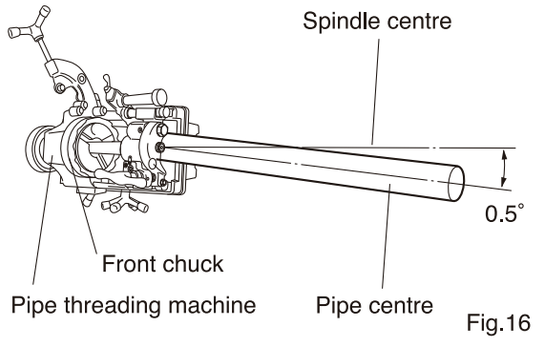

Fig.16

⚠ Guarantee and Exemption from Liability

1. Should the machine happen to break down for no apparent reason, despite normal and correct use, repairs and service parts shall be provided free of charge as outlined below.

   Repairs shall be provided free of charge for a period of one year from date of purchase.
   Dates, procedures and methods for providing repairs and service parts shall be decided in consultation with the customer.
   After the one-year guarantee period, all repairs and service parts will be charged.
   Repairs may be charged even within the guarantee period under the following circumstances:
   - if the machine has not been used according to the instructions in the Operation Manual
   - if it has been used for anything other than its intended purpose
   - if it has not been repaired according to the Operation Manual or if it has been remodeled
   - if blades or consumables need replacing
   - if the machine has been handled in an inappropriate way.

2. REX will accept no responsibility under the following circumstances:
   - if a malfunction or accident occurs as a result of fire, abnormal fluctuations in voltage, damage from flood, earthquakes, lightning or other natural disasters, war, conflict, riot, terrorism or pollution, etc.
   - when the machine has not been operated according to the Operation Manual
   - when the machine has been used incorrectly, repaired or remodelled inappropriately
   - when a malfunction or accident results from using a thread made on the machine, or leaving it lying around and/or exposed to the elements
   - when a malfunction or accident results from using a thread produced on the machine either while or after connecting it to a joint.

3. Any costs incurred by the manufacturer shall not exceed the purchase price of the machine.

REX

REX INDUSTRIES CO., LTD.

Overseas Sales Dept. & Factory :
1-9-3, Hishiyahigashi, Higashi Osaka 578-0948, Japan
Tel.: +81 - (0)72 - 961 - 9820 Fax.: +81 - (0)72 - 961 - 9878

URL https://www.rexind.co.jp

7A80-E3
PGM
2201D 0000

Specifications, colour, etc. may be changed without prior notification.